2022 Physics Trial Examination Solutions © itute 2022

SECTION A

Question 1

An electron moves in a circular path (centred at O) as shown in the following diagram.
The magnetic field causing the motion of the electron is

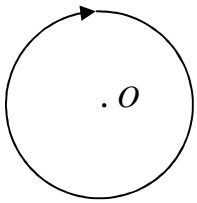

A. uniform and directed into the page
B. radial and directed from O
C. radial and directed towards O
D. circular and centred at O

Question 2

Let R_E be the radius of planet Earth. The gravitational field of the Earth at R_E above its surface is g_a.

When the gravitational field is $\frac{g_a}{4}$, the distance above its surface is

A. $5R_E$
B. $4R_E$
C. $3R_E$
D. $2R_E$

g_a is the field at $2R_E$ from Earth's centre, $\frac{g_a}{4}$ is at $4R_E$ from centre
.: distance above surface is $3R_E$

Question 3

Electric current flows into the page in each of two parallel long straight wires A and B as shown in the diagram.
The direction of the magnetic force on wire B is

A. vertically upwards
B. to the left
C. into the page
D. none of the above

A B
⊗ ⊗

Question 4

Energy ($\times 10^6$ J) required bringing a 1 kg mass from the surface of the Earth to an altitude of 1 Earth radius is closest to

A. 60
B. 53
C. 46
D. 38

Area under Force-distance graph $\approx \frac{1}{2}(9.8+2.5)\times 6.37\times 10^6 \approx 39\times 10^6$ J

The following information is for Questions 5 and 6

Two parallel light rays A and B ($\lambda = 700$ nm) hit a rectangular transparent block at X and Z respectively.
Ray A continues inside the block, reflects at the opposite side at Y, finally exits the block at Z and combines with reflected Ray B. The refractive index of the block is 1.5.

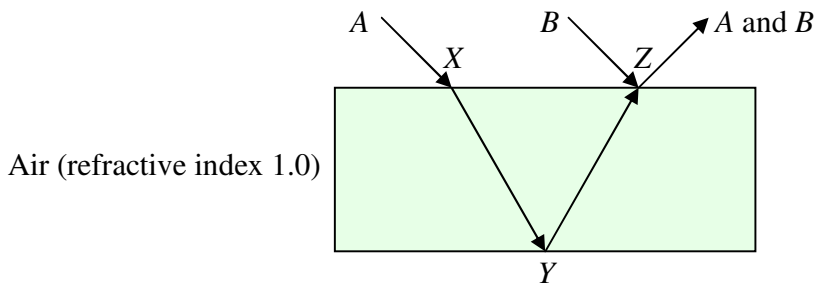

Question 5
The critical angle for total internal reflection is closest to

A. 37°
B. 42°
C. 47°
D. 52°

$$\text{Critical angle} = \sin^{-1}\left(\frac{1}{1.5}\right) \approx 42°$$

Question 6
Destructive interference occurs when Ray A and Ray B combine. The possible distance XY (in nm) is closest to

A. 200
B. 350
C. 525
D. 600

$$XY + YZ = \frac{n\lambda}{2} = 350n,\ XY = 175n,\ \text{possible } n = 1,3,5,\cdots$$

Question 7
A satellite has an orbital radius of R and a period of T. When its orbital radius is doubled, its period is closest to

A. $2.3T$
B. $2.8T$
C. πT
D. $3.5T$

$$\frac{R^3}{T^2} = \frac{(2R)^3}{t^2},\ t \approx 2.8T$$

Question 8
The mass measurements (in grams) of four samples are: $34.23,\ 0.0030,\ 100.0$ and 10.070.
The total mass (in grams) of the four samples is closest to

A. 144.3030
B. 144.303
C. 144.3
D. 144

$$34.2 + 0.0 + 100.0 + 10.1 = 144.3$$

A 100 kg crate slides at constant velocity down a plane inclined at $30°$ to the horizontal.

Question 9
The reaction force (N) of the plane on the crate is closest to

A. 980
B. 849
C. 500
D. 490

Constant velocity, net force $= -$ force of gravity + reaction force = 0, reaction force = 980

Question 10
Due to friction, the crate exerts on the inclined plane a force of

A. 980 N
B. 849 N
C. 500 N
D. 490 N

Due to friction the plane exerts $980\sin 30° = 490$ N on the crate, the crate exerts 490 N on the plane.

Question 11
Consider the three frames of reference: (I) a descending lift coming to a stop, (II) a geostationary satellite, and (III) a train climbing up a straight sloping track at increasing speed.
Newton's First Law **holds** in

A. (I) and (II) only
B. (II) and (III) only
C. (I) and (III) only
D. none of the three frames of reference

All three frames of reference are accelerating frames.

Question 12
Spaceship A and Spaceship B travel side by side passing Earth at $0.8c$.
A clock on Spaceship A advances 60 seconds as observed by a traveler in Spaceship A.
The durations (in seconds) measured by an observer in Spaceship B and by an observer on Earth are respectively

A. 60 and 60
B. 60 and 75
C. 60 and 100
D. 75 and 60

No relative velocity between A and B, no time dilation. For observer on Earth, dilated time $= \frac{60}{\sqrt{1-0.8^2}} = 100$

Question 13
The time taken to travel a distance of $98.5\,\text{m} \pm 0.2\%$ is $20.3 \pm 0.1\,\text{s}$.
The average speed (in m s^{-1}) is best represented by

A. 4.85 ± 0.04
B. $4.852 \pm 0.7\%$
C. 4.852 ± 0.034
D. $4.8522 \pm 0.7\%$

$20.3 \pm 0.1 = 20.3 \pm 0.5\%$
Av speed $= \frac{98.5 \pm 0.2\%}{20.3 \pm 0.5\%} \approx 4.85 \pm 0.7\% = 4.85 \pm 0.04$, 3 sig. fig.

Question 14
A stretched string has a length of $0.45\,\text{m}$. A standing wave is formed in the stretched string.
The vibrating string produces a sound wave in the air.
The sound wave in the air has a wavelength of $2.0\,\text{m}$ and a speed of $336\,\text{ms}^{-1}$.
A possible wavelength (cm) of the standing wave in the stretched string is closest to

A. 200
B. 100
C. 50
D. 30

$L = 45\,\text{cm}$, possible $\lambda = 90, 45, 30, \cdots$, i.e. fundamental, second harmonic, third harmonic, …

Question 15
A basket ball is initially thrown horizontally to the right in a school gymnasium.
During its flight to the ground, its acceleration is best described as

A. 9.8 m s^{-2} vertically downwards
B. less than 9.8 m s^{-2} vertically downwards
C. greater than 9.8 m s^{-2} vertically downwards plus a component to the right
D. less than 9.8 m s^{-2} vertically downwards plus a component to the left

There is air resistance against its motion

Question 16
A person attempts a bungee jump through air. Maximum speed of the person occurs when

A. air resistance on the person is at its maximum value
B. air resistance on the person is at its minimum value
C. air resistance and force of gravity on the person are equal
D. force of gravity and force of the extended bungee cord on the person are equal

Air resistance depends on speed

Question 17
The dual nature of light can **best** be demonstrated by

A. diffraction of light experiment
B. single photon double slit experiment
C. single electron double slit experiment
D. photoelectric effect experiment

Question 18
Quantised energy levels of a hydrogen atom can be explained by

A. absorption/emission spectra
B. single electron diffraction experiment
C. De Broglie's idea of matter wave
D. dispersion of light experiment

Question 19
The sky appears blue on a clear day. This phenomenon is best explained by
A. refraction of light
B. diffraction of light
C. polarization of light
D. interference of light

When sunlight goes through air, the red end (longer wavelength) of the spectrum has more diffraction and passes through the air particles whilst the blue end is scattered by the air particles reaching your eyes.

Question 20
In a photoelectric effect experiment, electrons are emitted when light is directed at a metal (one of the electrodes) inside a photocell.
The emitted electrons have a range of kinetic energy. The range of kinetic energy can be determined by
A. varying the accelerating voltage
B. varying the retarding voltage
C. changing the intensity of light
D. changing the frequency of light

SECTION B

Question 1 (15 marks)
The following diagram shows a uniform and static magnetic field of 1.5 T directed into the page.
A light globe of resistance $0.50\,\Omega$ is connected to the terminals P and Q of a rectangular coil of 50 turns of enameled copper wire. The coil has negligible resistance.
The side lengths of the rectangular coil are 60 cm and 20 cm.
The coil is completely inside the magnetic field **initially**. It is pulled to the left at $0.10\,\text{m s}^{-1}$.
The diagram below shows the position of the rectangular coil at time $t = 0$.
Consider the emf induced **only** by the rectangular coil.

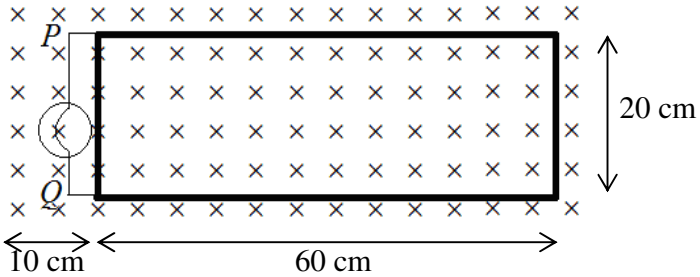

a. Calculate the maximum flux through the coil. 1 mark

Maximum flux $= 1.5 \times 0.60 \times 0.20 = 0.18\,\text{wb}$

b. Sketch an appropriate graph showing the magnetic flux (magnitude) through the rectangular coil of 50 turns of enameled copper wire for the first 10 seconds. Label the axes and show units.

4 marks

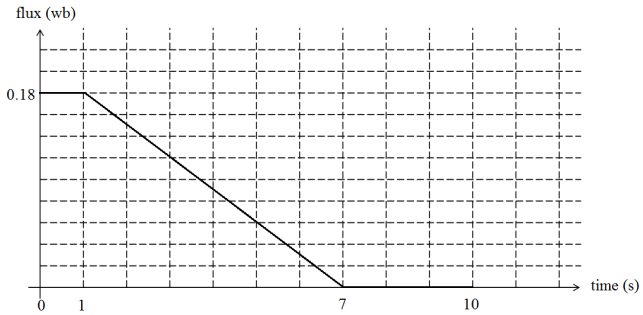

c. Calculate the maximum difference in potential between P and Q. 2 marks

Maximum potential difference $= 50 \times \frac{0.18}{6} = 1.5\,\text{V}$

d. Calculate the maximum power of the light globe. 1 mark

Maximum power $= \frac{1.5^2}{0.50} = 4.5\,\text{W}$

e. Determine the polarity of terminal P. Explain your answer. 2 marks

Flux (into the page) decreases as the coil moves to the left out of the magnetic field. An induced current flows anticlockwise from Q to P according to Lenz's Law, making P negative.

f. Describe and determine the force required to pull the coil to the left at $0.10\,\text{m s}^{-1}$ during the first 10 seconds.

3 marks

In the first second no force is required because there is no change in flux and no current in the coil.
In the next six seconds, there is a change in flux and hence an induced current.
$4.5 = 1.5I \therefore I = 3.0\,\text{A},\ F = nBIL = 50 \times 1.5 \times 3.0 \times 0.20 = 45\,\text{N}$
In the next three seconds no force is required because there is no change in flux and no current in the coil.

g. Determine the amount of work done by the force in the first 5 seconds. 2 marks

No work is done in the first second. For the next four second, work done $= P\Delta t = 4.5 \times 4 = 18\,\text{J}$
Total work done in the first five seconds $= 18\,\text{J}$

Question 2 (8 marks)
An enameled copper wire is bent into the shape as shown below.
Section *RQ* is continuous. The rectangular loop has dimensions of 8 cm and 12 cm.

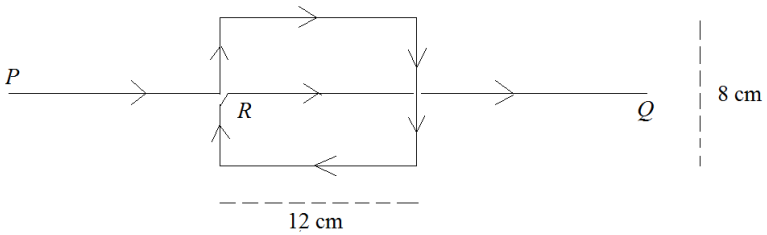

A magnet is placed just below the coils. PQ is the axis of rotation.

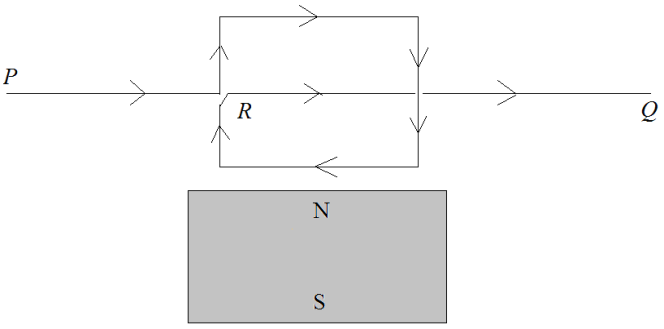

Assume that the magnet provides a magnetic field of 1.5 T at the lower side and decreasing gradually to 0.3 T at upper side when the loop is vertically orientated.
The arrows show the current flow in the coil when terminals *P* and *Q* are connected to a battery.
Assume that there is **zero** friction and air resistance on the moving parts.
Directions: up/down; left/right; into/out of the page; clockwise/anticlockwise

The coil is at rest initially.

a. Compare the direction and magnitude of the magnetic forces on the lower and upper sides of the vertically orientated loop.

3 mark

Lower side: Magnetic force points into the page. A stronger magnetic field (1.5 T) gives a stronger magnetic force.	Upper side: Magnetic force points out of the page. A weaker magnetic field (0.3 T) gives a weaker magnetic force by a factor of $\frac{0.3}{1.5} = 0.2$

b. When view from the left, describe and explain the motion of the coil. 3 marks

The pair of magnetic forces (upper and lower) produces a clockwise torque causing the loop to rotate clockwise with increasing speed. After a quarter turn, the torque reverses direction causing the loop to slow down its clockwise rotation and comes to a stop at half turn. Now the pair of magnetic forces produces an anticlockwise torque causing the loop to rotate anticlockwise with increasing speed. After a quarter turn, the torque reverses direction causing the loop to slow down its anticlockwise rotation and comes to a stop at half turn.
Then the motion repeats itself.

c. If there is some friction/air resistance on the moving parts, describe and explain the motion of the coil.

2 marks

If there is some friction/air resistance on the moving parts, the loop will lose kinetic energy to heat loss and be unable to complete each half turn. Eventually it settles at a horizontal position.

Question 3 (10 marks)
Person A of mass 65 kg is in a vertical circular rollercoaster ride.
The diagram below shows the person at the highest and lowest point of the ride.
The rollercoaster is designed to have a maximum acceleration of $4.1g$ ($g = 9.8\,\text{m s}^{-2}$).
Assume that there is **zero** friction, air resistance and driving force on the carriage.

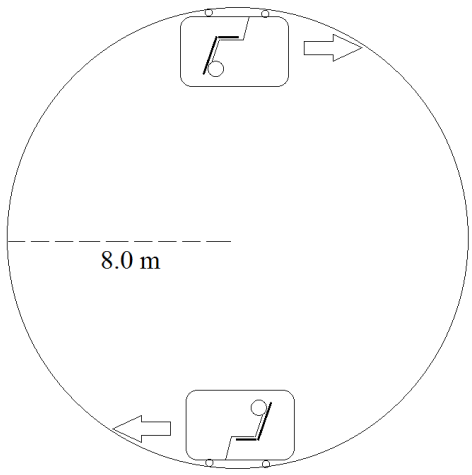

a. Determine the maximum speed of the carriage around the loop. 2 marks

Maximum acceleration occurs at the lowest point. $\frac{(v_{max})^2}{8.0} = 4.1 \times 9.8$, $v_{max} \approx 18$ m s^{-1}

b. Determine the maximum speed of the carriage at the highest point of the ride. 2 marks

$\frac{1}{2}mv^2 + mgh = \frac{1}{2}m(v_{max})^2$, $v^2 + 2 \times 9.8 \times 16 = (v_{max})^2$, $v = 2.8$ m s^{-1}

c. Describe and explain the experience of Person A in part b in terms of acceleration and reaction force on the person.

3 marks

Person A (mass 65 kg) experiences a downward acceleration of $\frac{2.8^2}{8} = 0.98$ m s^{-2}. The safety harness provides an upward reaction force on Person A of $65(9.8 - 0.98) \approx 570$ N, preventing them from falling off the carriage.

Now Person B of mass 85 kg is in the vertical circular rollercoaster ride under the same conditions.

d. Describe and explain the experience of Person B at the highest point in terms of maximum speed, acceleration and reaction force on the person.

3 marks

Since $\frac{1}{2}mv^2 + mgh = \frac{1}{2}m(v_{max})^2$, $\frac{1}{2}v^2 + gh = \frac{1}{2}(v_{max})^2$, the mass of Person B does not affect their maximum speed at the highest point and hence their acceleration $\frac{2.8^2}{8} = 0.98$ m s^{-2} downwards.

The safety harness provides a stronger upward reaction force on Person B of $85(9.8 - 0.98) \approx 750$ N

Question 4 (8 marks)

An electron is introduced into a laboratory vacuum chamber at the surface of Earth.
A uniform electric field E and a uniform magnetic field B is maintained in the chamber to keep the particle moving in a horizontal straight line at a speed of 1.5×10^2 m s^{-1}.
The electric field is directed upwards, and it is generated by a potential difference of 12 V over 3.0 m.
Assume that force of gravity on the electron is insignificant.
Directions: up/down; left/right; into/out of the page

a. State the direction of the electric force on the electron in the uniform electric field E. 1 mark

Down

b. Describe the direction of the uniform magnetic field B. 1 mark

Suppose the electron moves from left to right in the chamber. The magnetic force on the electrons must be up to balance the electric force. This required the magnetic field to be out of the page. If the electron moves in the opposite direction, the magnetic field is into the page.

c. Calculate the electric force on the electron. 2 marks

Electric field strength $E = \frac{12}{3.0} = 4.0\ \text{N C}^{-1}$, electric force $= 1.6\times10^{-19}\times4.0 = 6.4\times10^{-19}\,\text{N}$

d. Calculate the magnetic field strength required. 2 marks

$qvB = qE$, $B = \frac{E}{v} = \frac{4.0}{1.5\times10^{2}} \approx 0.027\,\text{T}$

Another charged particle which is 1000 times the mass and 2 times the charge of an electron is used instead of an electron.

e. Discuss the changes if any to E and B necessary to keep the same speed and path of the particle. 2 marks

The force of gravity on the larger mass remains insignificant ($1000\times9.1\times10^{-31}\times9.8 \approx 8.9\times10^{-27}$ N).
Zero net force to keep the same speed and path. $qvB = qE$, $v = \frac{E}{B}$. Same speed if $\frac{E}{B}$ remains the same.
Hence no change in E or B is necessary.

Question 5 (8 marks)
An elastic band has a natural length of 1.20 m. One end of the band is fastened to the ceiling.
Figure 1 shows the elastic band with a 1.00 kg mass attached to the other end. The mass is at rest and the stretched elastic band is 1.80 m long
The attached mass is **lifted vertically upwards** so that it is in contact with the ceiling as shown in Figure 2.
The mass is then released. The elastic band follows Hooke's law.

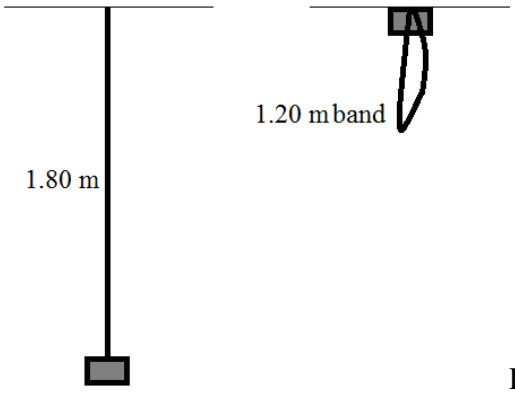

Figure 1 Figure 2

a. Calculate the force constant k in Hooke's law $F = kx$. 1 mark

$k\times0.60 = 1.00\times9.8$, $k \approx 16.3\,\text{N m}^{-1}$

b. Calculate the amount of work done in lifting the mass to the ceiling while it is attached to the band. 3 marks

Amount of work $= mgh - \frac{1}{2}kx^2 = 1.00\times9.8\times1.80 - \frac{1}{2}\times16.3\times0.60^2 \approx 14.7$ J

The mass is released from its new position.

c. Show that the stretched band is closed to 3.14 m long when the mass is at its lowest point. 2 marks

$$mgL = \frac{1}{2}k(L-1.20)^2,\ 1.00\times 9.8\times 3.14 \approx \frac{1}{2}\times 16.3(3.14-1.20)^2$$

d. Calculate the maximum speed of the mass. 2 marks

Maximum speed occurs when net force is zero, i.e. when the band is 1.80 m long.

$$mgh = \frac{1}{2}mv^2 + \frac{1}{2}kx^2,\ 1.00\times 9.8\times 1.80 = \frac{1}{2}\times 1.00v^2 + \frac{1}{2}\times 16.3\times 0.60^2,\ v \approx 5.4\ \text{m s}^{-1}$$

Question 6 (7 marks)

An apple (0.25 kg) is suspended with a thread (assume zero mass).
A sharp needle (10.0 grams) is projected at a speed of 50 ms^{-1} horizontally towards the apple. The needle travels a distance of 9.0 cm through the apple and exits the apple at 40 ms^{-1}.

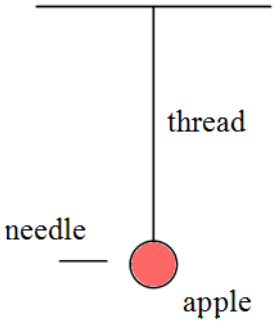

a. Show that the speed of the apple is 0.40 ms^{-1} immediately after the exit of the needle. 2 marks

Conservation of momentum: $0.25v + 0.0100\times 40 = 0.0100\times 50,\ v = 0.40\ \text{ms}^{-1}$

b. Show that the average force on the apple is approximately 49.8 N. 3 marks

As the needle passes through the apple, the force of friction generates heat and reduces the total kinetic energy of the needle and apple. Force of friction accelerates the apple.
Heat (work done by average force of friction) $= \Delta E_k$

$$\left|\vec{F}_{av}\right|\times 0.090 = \frac{1}{2}\times 0.0100\times 50^2 - \frac{1}{2}\times 0.0100\times 40^2 - \frac{1}{2}\times 0.25\times 0.40^2,\ \left|\vec{F}_{av}\right| \approx 49.8\,\text{N}$$

c. Calculate the approximate time taken by the needle to pass through the apple. 2 marks

Average force on needle = average force on apple

Average acceleration of needle $= \dfrac{-49.8}{0.0100} \approx -4980\ \text{ms}^{-2},\ u = 50,\ v = 40,\ t = \dfrac{v-u}{a} \approx 0.0020\ \text{s}$

Question 7 (6 marks)
Two ohmic devices A (100Ω) and B (50Ω) are connected in parallel as shown in the diagram below.
The circuit is powered by an AC source of 240 V rms.
The resistance per metre of the connecting wires in the circuit is $0.05\ \Omega$.

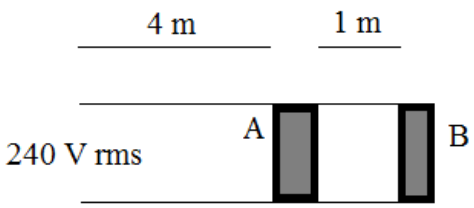

a. Calculate the rms current in device B. 3 marks

$$\text{Total resistance} = 0.2 + \frac{1}{\frac{1}{100} + \frac{1}{0.05+50+0.05}} + 0.2 \approx 33.778\ \Omega,\ I_{source} \approx \frac{240}{33.778} \approx 7.105\,\text{A},$$

$$V_{PQ} \approx 240 - 0.2\times 7.105 - 0.2\times 7.105 \approx 237.158\,\text{V},\ I_{50} \approx \frac{237.158}{0.05+50+0.05} \approx 4.734 \approx 4.7\,\text{A}$$

b. Calculate the total power loss in the connecting wires. 2 marks

$$\text{Power loss} \approx 2\left(7.105^2 \times 0.2 + 4.734^2 \times 0.05\right) \approx 22.4\,\text{W}$$

c. Determine the total power of devices A and B. 1 mark

$$\text{Total power of devices A and B} \approx 240\times 7.105 - 22.4 \approx 1680\,\text{W}$$

Question 8 (6 marks)
A 75 kg person in a spacecraft departing Earth at 2.7×10^8 m s^{-1} measures 1.2 s as the time of travel.

a. Determine the time of travel of the 75 kg person measured by an Earth observer. 2 marks

The 75 kg person measures 1.2 s as the proper time.

$$\text{Dilated time measured by an Earth observer} = \frac{1.2}{\sqrt{1-\left(\frac{2.7}{3.0}\right)^2}} \approx 2.75\,\text{s}$$

b. Determine the mass of the person in the spacecraft and the relativistic kinetic energy of the person measured by an Earth observer.

2 marks

$$\text{Rest mass} = 75\,\text{kg, mass measured by an Earth observer} = \frac{75}{\sqrt{1-\left(\frac{2.7}{3.0}\right)^2}} \approx 172\ \text{kg}$$

$$\text{Relativistic kinetic energy} \approx (172-75)\times c^2 \approx 8.7\times 10^{18}\,\text{J}$$

c. Determine the distance travelled by the spacecraft measured by an Earth observer. 2 marks

$$\text{Distance measured by an Earth observer} \approx 2.7\times 10^8 \times 2.75 \approx 7.4\times 10^8\,\text{m}$$

Question 9 (7 marks)
Circular surface waves are generated by two dippers (sources) dipping into water at the same frequency of 10 Hz. The depth of water is uniform.
The interference pattern is shown in the diagram below.
Distance S_2A is 1.05 m approximately.

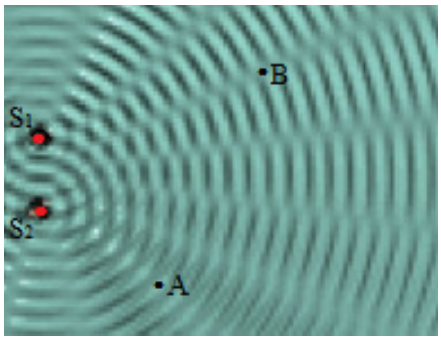

a. Estimate the speed of the water waves. 2 marks

$S_2A \approx 7\lambda \approx 1.05$, $\lambda \approx 0.15\,\text{m}$, $v \approx 10 \times 0.15 = 1.5\,\text{ms}^{-1}$

b. Estimate the difference between distances S_1B and S_2B. 2 marks

Point B is on the second nodal line from the central line. $S_2B - S_1B = \frac{3}{2}\lambda \approx 0.23$ m

c. Suggest 3 ways to increase the number of nodal lines in the interference pattern. 3 marks

Increase the distance between S_1 and S_2
Increase the frequency of the dippers
Decrease the water depth to decrease the wave speed and hence decrease the wavelength

Question 10 (7 marks)
Assume zero air resistance.
A 0.20 kg object is projected at $\theta°$ to the horizontal ground. It reaches a maximum height of 10 m at a speed of 5.0 m s^{-1}. It has a speed of 11 m s^{-1} at certain point of its flight.

a. Determine the height of the object above the ground when it has a speed of 11 m s^{-1}. 2 marks

Conservation of energy: $\frac{1}{2}m11^2 + m9.8h = \frac{1}{2}m5^2 = m9.8 \times 10$, $h \approx 5.1\,\text{m}$

b. Determine the time when the object travels at 11 m s^{-1} on its downward flight. 3 marks

Vertical component: $v = -\sqrt{11^2 - 5.0^2} \approx -9.798$
$v^2 = u^2 + 2as$, $(-9.798)^2 = u^2 - 2 \times 9.8 \times 5.1$, $u \approx 14$
$v = u + at$, $-9.798 = 14 - 9.8t$, $t \approx 2.4\,\text{s}$

c. Determine the angle of projection $\theta°$. 2 marks

$\tan\theta° \approx \frac{14}{5.0}$, $\theta \approx 70$

Question 11 (7 marks)
The diagram below shows a two-chair swing ride. Neglect the mass of the cables and treat the chair and person as one particle.
Particle A has a mass of 60 kg. The cable holding Particle A makes $40°$ with the vertical during rotation.

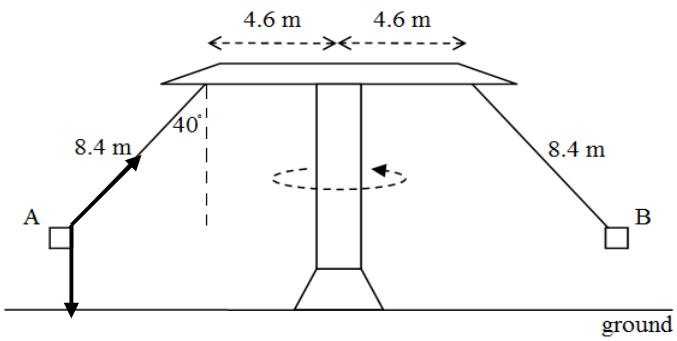

a. Draw arrows on the diagram above to show the forces on Particle A. 1 mark

b. Determine the tension in the cable holding Particle A during rotation. 2 marks

$T\cos 40° = 60\times 9.8$, $T \approx 767.58 \approx 770\,\text{N}$

c. Determine the time to complete one revolution by Particle A. 3 marks

Radius of rotation $r = 8.4\sin 40° + 4.6 \approx 10$ m

Centripetal force $F = ma$, $767.58\sin 40° \approx 60\times\dfrac{4\pi^2\times 10}{t^2}$, period $t \approx 6.9$ s

d. Particle B has a mass of 80 kg.
The cable holding Particle B makes $\phi°$ with the vertical during rotation. Find the value of ϕ. 1 mark

Mass does not affect the calculation in part c, $r \approx 10$, $t \approx 6.9$, $\phi = 40°$

Question 12 (3 marks)
Electrons are emitted when a monochromatic light ray ($\lambda = 410$ nm) is directed at a piece of metal.
The threshold frequency of light for photoemission is 6.5×10^{14} Hz.

a. Show that the work function of the metal is approximately 4.3×10^{-19} J. 1 mark

Work function $\phi = hf = 6.63\times 10^{-34}\times 6.5\times 10^{14} \approx 4.3\times 10^{-19}$ J

b. Determine the **range** of kinetic energy of the photoelectrons. 2 marks

$E_{k\,max} = \dfrac{hc}{\lambda} - \phi = \dfrac{6.63\times 10^{-34}\times 3.0\times 10^{8}}{410\times 10^{-9}} - 4.3\times 10^{-19} \approx 5.5\times 10^{-20}$ J. The range is zero to 5.5×10^{-20} J

Question 13 (3 marks)
Two stretched wires (1 m and 3 m long) vibrate at the same frequency of 21 Hz.
The 1-metre wire and the 3-m wire vibrate at the first and third harmonics respectively.

a. Determine the value of $\dfrac{\text{wave speed in the 1 m wire}}{\text{wave speed in the 3 m wire}}$. 2 marks

$$\frac{\text{wave speed in the 1 m wire}}{\text{wave speed in the 3 m wire}} = \frac{f\lambda_1}{f\lambda_3} = \frac{\lambda_1}{\lambda_3} = \frac{2}{2} = 1$$

b. Determine the frequency of the fifth harmonic of the 3 m wire. 1 mark

35 Hz

Question 14 (3 marks)
Neutron diffraction is used to study the structure of crystalline solids.
In such a study, neutrons of the same energy are directed at a polycrystalline powder.
Typical separation between atoms in a crystal is $0.1\,\text{nm}$. Neutron mass $\approx 1.67\times10^{-27}\,\text{kg}$

Estimate the speed of the neutrons to produce a clear diffraction pattern. 3 marks

Significant diffraction occurs when the de Broglie wavelength of a neutron is comparable with the spacing between atoms in a crystal, i.e. $\lambda = \dfrac{h}{p} = \dfrac{h}{mv} = \dfrac{6.63\times10^{-34}}{1.67\times10^{-27}v} \approx 0.1\times10^{-9}$, $v \approx 4.0\times10^{3}\,\text{m s}^{-1}$

Question 15 (5 marks)
A diffraction pattern is formed over time by passing photons from a dim light source through a tiny opening.
The number of photons emitted by the source in one second is estimated to be 10^6.

a. Estimate the average separation between photons. 2 marks

In one second a photon would travel 3.0×10^{8} m, and 10^6 were emitted.
The average separation between photons $\approx \dfrac{3.0\times10^{8}}{10^{6}} = 300\,\text{m}$

b. Explain how the diffraction pattern can be used to demonstrate Heisenberg's uncertainty principle. 3 marks

Heisenberg's uncertainty principle says that position x and momentum p cannot be determined precisely, where p shows the direction θ of propagation of a particle. Both quantities contain uncertainties, Δx is the uncertainty in position and Δp is the uncertainty in momentum, and $\Delta x \Delta p \geq \dfrac{h}{2\pi}$.
A single slit photon diffraction experiment gives an excellent illustration of the principle. Consider the uncertainty in the photon position Δx as the slit width when it passes through the slit. When the slit width decreases (smaller Δx, smaller uncertainty in position), the diffraction pattern becomes wider (larger Δp, greater uncertainty in momentum, i.e. larger range of θ and hence a wider central bright region).

Question 16 (7 marks)
The following data are obtained from a photoelectric effect experiment, showing the stopping voltage required for light of a particular wavelength.

Wavelength λ (nm)	Stopping voltage V_s (V)
365 ± 2	0.76 ± 0.16
405 ± 2	0.60 ± 0.12
546 ± 2	0.44 ± 0.09
577 ± 2	0.44 ± 0.09

a. Complete the following table for the above data, including uncertainties. 2 marks

Frequency f (10^{14} s^{-1})	Maximum kinetic energy of photoelectrons E_{max} (eV)
8.22 ± 0.05	0.76 ± 0.16
7.41 ± 0.04	0.60 ± 0.12
5.49 ± 0.02	0.44 ± 0.09
5.20 ± 0.02	0.44 ± 0.09

A graph of E_{max} (eV) versus f (10^{14} s^{-1}) is shown below for the three calculated frequencies in the table.

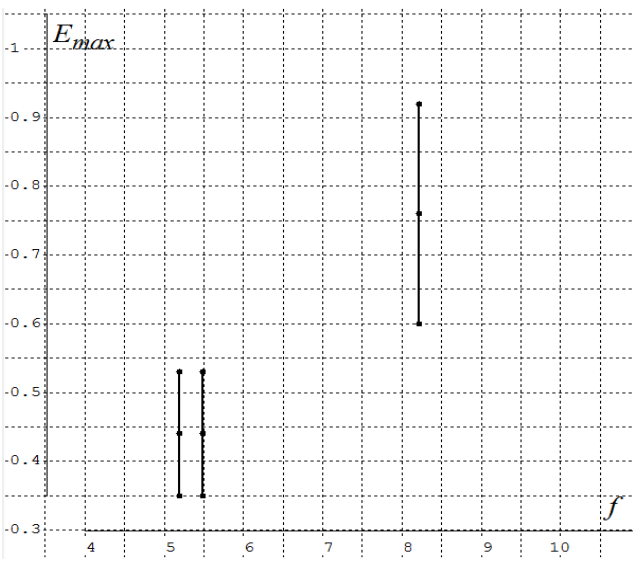

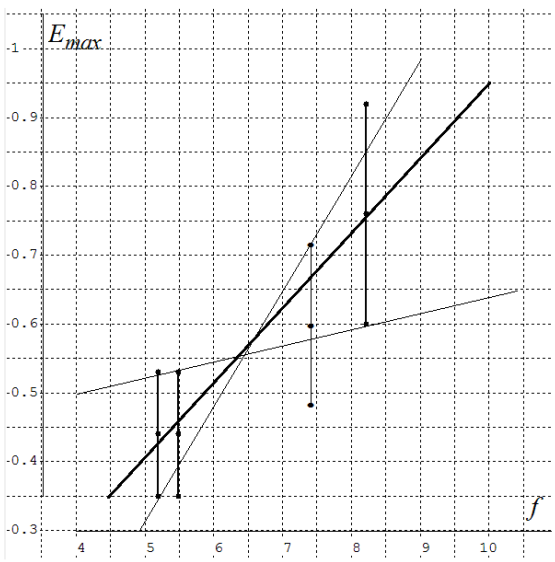

b. Plot the remaining point accurately on the graph above and draw the line of best fit. 2 marks

c. Estimate Planck's constant from your line of best fit. Include uncertainty estimation in your answer using maximum and minimum possible slopes. 3 marks

Subjective estimation of Planck's constant from the given data $\approx (1.1 \pm 0.9) \times 10^{-15}$ eVs